PRODUCT DATASHEET

DESCRIPTION
品　　名:　　金属信号灯metal indicator light

SPECIFICATION
规　　格:　　19mm

DATE
编制日期:　　2019-12-16

PART NO.
本厂型号:　　KZ1M-19SJ-1

REFERENCE No.
档案编号:

1. 图片Picture:

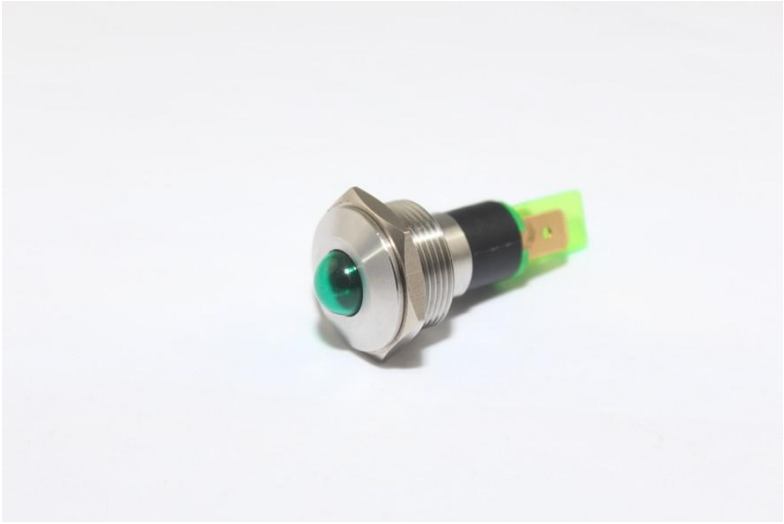

2.图纸drawing

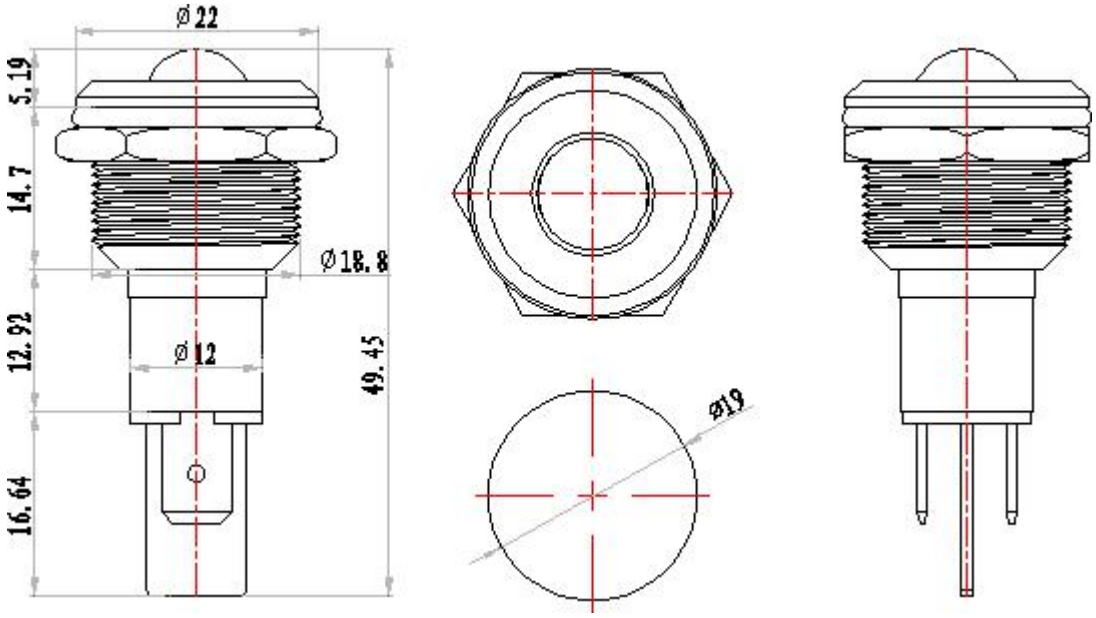

3配件材料component material

配件名Component name	材料material
灯罩 lens	PC 塑 料 PC plastic
金属壳 Metal body	H59 黄铜 or 204 不锈钢 H59 brass or 204 stainless steel
加固垫片 wahser	T10 冷轧钢 T10 Cold Rolled Steel
防水圈 rubber ring	SIL 硅 胶 SIL silica gel
螺帽 nut	H59黄铜 H59 nickel plated brass
灯座 housing	PA66阻燃尼龙 PA66 nylon
光源 Light source	LED LED灯
电阻 Resistor	金属膜电阻 Metal film
导线 Cable	
插件 plug-in	C2680环保铜 C2680 RoHS brass

4性能参数 performance parameter

项目items	参数parameter
额定电压 Rated voltage	3V-780V DC or AC
额定电流 rated current	20mA
额定功率 rated power	0.2W
绝缘耐压 Insulation and voltage resistance	1800V
工作寿命 working life	100000h
电气寿命 electrical life	100000次
耐寒 cold-resistant	-40℃
耐热 heat-resisting	80℃

5.LED Specification:

■ **Emitter** 外型图

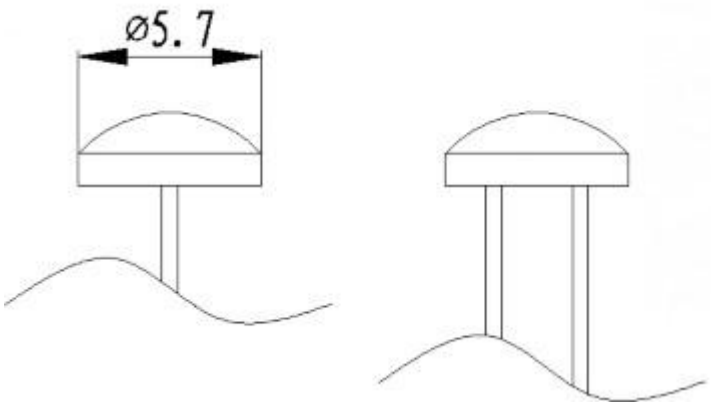

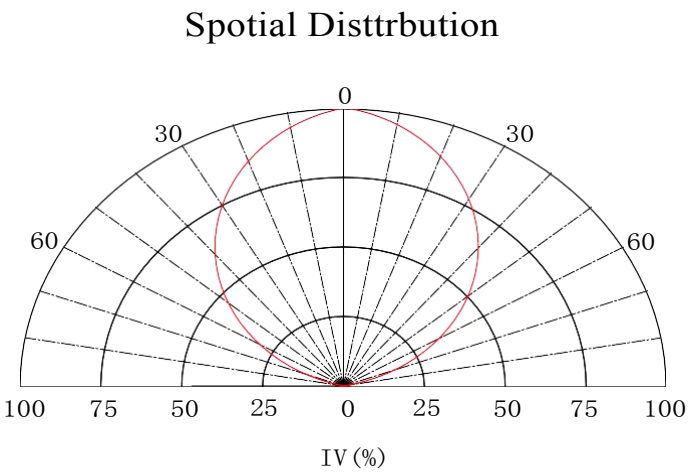

■ Absolute Maximum Rating 极限工作参数

参数 Parameter	符号 Symbol	单位 Unit	极限参数 Maximum Rating
耗散功率 Power Dissipation	P	MW	60
连续正向电流 Continuous Forward Current	I_F	MA	25
反向电压 Reverse Voltage	V_R	V	5
工作温度范围 Operating Temperature Range	Top	℃	-25 to +80
存放温度范围 Storage Temperature Range	Tst	℃	-25 to +90
最高焊接温度 Soldering Temperature	Tso	℃	260 (for 5 second)

*Ifp Conditions: Pulse Wide≤10msec≤1/10　　瞬间脉冲电流

*Tsol Conditions:3mm from the base of epoxy bulb 最高焊接温度 距胶体3mm

Typical electrical-optical Characteristics curvers

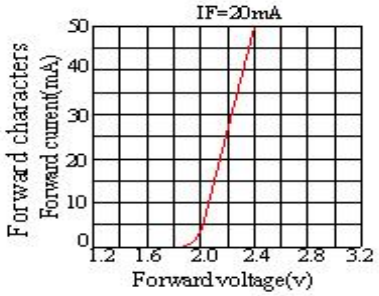

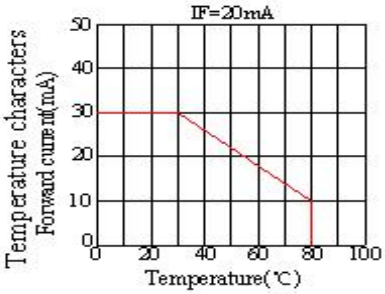

Notes:

The data are an typical presenlation of the product,Contact customer service for details of technical information and warranty.

The product is sensitive to static antistatic operation environment is recommended

Products are shipped in either bulk bag package or taping.

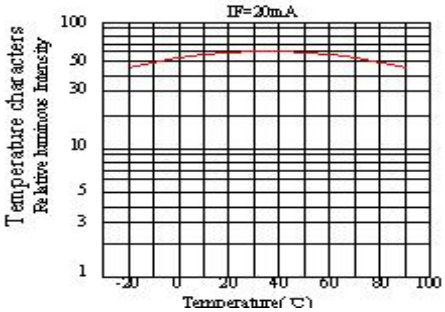

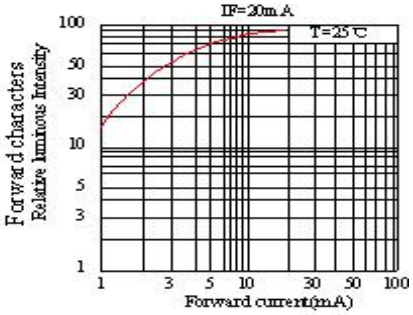

■ Typical Optical/Electrical Characteristics 光电特性参数

Color parameters 色参数		Optical Brightness 光亮度	0.00 cd/m2
Main Wavelength 主波长	520.7.0 nm	light intensity 光强度	1000 mcd
Peak Wavelength 峰值波长	632.2 nm	luminous flux 光通量	4.8 lm
Peak width 峰值带宽	21.3 nm	luminous power 光功率	0.32 mW
colour coordinates xy 色坐标xy	(.1404.7126)	luminous efficacy 发光效率	56.81 lm/W
colour coordinates u'v' 色坐标u'v'	(.0498.5690)	forward current 正向电流	20.00 mA
colour purity 色纯度	0.758	alternating voltage 交流电压	4.22 V
Color temperature 色温	8400k	AC power 交流电功率	0.084 W

Notes:

1.Work absolute ratings Ta=25℃ humidity=60% 工作常规值 温度=25℃ 湿度=60%

2.Tolerance of measurement of forward voltage±0.1V 正向电压误差范围±0.1V

3.Test Machine: SSP6612 series LED test system

LED LAMP RELIABLITY

Type	Test Item	REF. Standard	Test Condition	Note	Number of Damaged
Environmental Sequence	Temperature Cycle	JIS C 7021 (1997) A-4	-20℃→25℃→80℃→ 25℃ 30mins,5mins,30mins,5mins	100 cycles	0/100
	High Humidity Heat Cycle	JIS C 7021 (1997) A-5	30℃→65℃ 90%RH 24hrs/1cycle	10 cycles	0/100
	High Temperature Storage	JIS C 7021 (1997) B-10	Ta=80℃	1000hrs	0/100
	Humidity Heat Storage	JIS C 7021 (1997) B-11	Ta=60℃ RH=90%	1000hrs	0/100
	Low Temperature Storage	JIS C 7021 (1997) B-12	Ta= -30℃	1000hrs	0/100
Operation Sequence	Life Test	JIS C 7035 (1985)	Ta=25℃ I_F=20mA	1000hrs	0/100
	High Humidity Heat Life Test	*	60℃ RH=90% I_F=20mA	500hrs	0/100
	Low Temperature Life test	*	Ta= -20℃ I_F=20mA	1000hrs	0/100
Destructive Sequence	Resistance to Soldering Heat	JIS C 7021 (1997) A-11	Tsol=260 ± 5℃,10sec (3mm from the base of the epoxy bulb)	1 time	0/20
	Solder ability	JIS C 7021 (1997) A-2	Tsol=235 ± 5℃,5sec (Using flux)	1 time (over 95%)	0/20
	Lead Pull/Bend Test	JIS C 7021 (1997)A-11	Load 2.5N (0.25kgf) 0°→90°→0° Bending 3 times	No noticeable damage	0/20

- **Test Items And Results**

  * Refer to reliability test standard specification for in this line.

  ● **Criteria for Judging The Damage**

Item	Symbol	Test Condition	Criteria for Judgment	
			M in.	M ax.
Forward Voltage	V_F	I_F =20mA	---	Initial data x 1.1
Reverse Current	I_R	V_R = 5V	---	Initial data x 2.0
Luminous Intensity	Iv	I_F =20mA	Initial data x 0.7	---

6. Resistor Specification (RMS 1/4W 200kΩ):

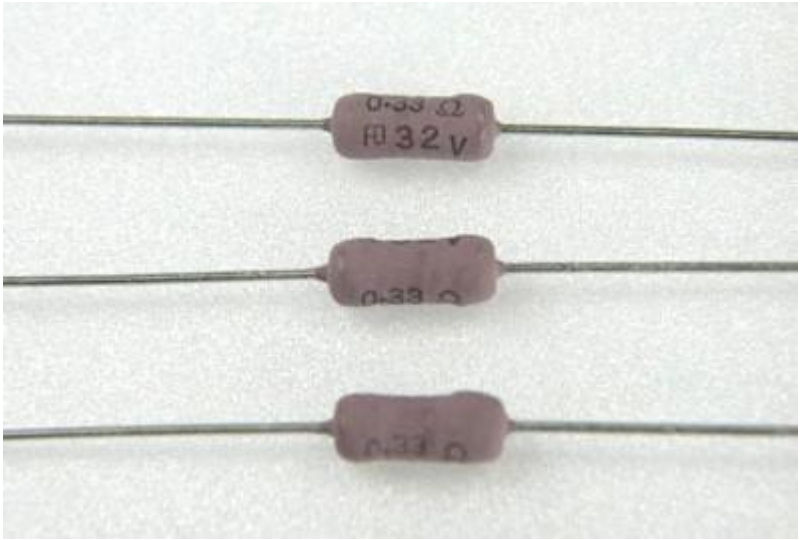

CHARACTERISTICS 性 能

ITEM 项 目	SPEC 规 格	REMARKS 备注
Load life under high temperature 高温负荷寿命	±1.5%	JIS C 5201-1 (4.25.1) Rated voltage at 70℃ for 1,000 hours 额定电压70℃ 1,000 小时
Load life under high humidity 耐湿负荷寿命	±5%	JIS C 5201-1 (4.24) Rated voltage at 40℃,95% RH for 1,000 hours 额定电压40℃,95% RH 1,000小时
Temp. coeff. of resistance 温度系数	< 1K= ±500 PPM/℃ ≦100KΩ=±300 ppm/℃ >100KΩ=±200 ppm/℃	JIS C 5201-1 Room temp. + 100℃，30min 室温 + 100℃，30分钟
Short time overload 短时间过负荷	±1%	JIS C 5201-1 (4.13) 6.25 times the rated power for 5 seconds 6.25倍额定功率 5 秒
Temperature cycling 温度循环	±1%	JIS C 5201-1 (4.19) 5 cycles for −25℃±3℃(30min)；room temp.(30min) ~ +85℃±3℃(30min) room temp. (30min)
Resistance to soldering heat 焊锡耐热	±1%	JIS C 5201-1 (4.18) 260℃±5℃ for 10 seconds(焊锡槽) 350℃±10℃ for 3.5 seconds(手焊锡)
Insulation resistance 绝缘电阻	>1,000MΩ	JIS C 5201-1 (4.6.1.1) 500 volt Insulation test 1min 500 V绝缘测试电压1分钟

Pulse withstanding voltage 脉冲	±20%	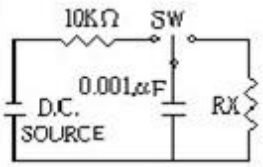 ■The following discharge cycle is repeated in the circuit of the left fig. 2.5 sec. ON 2.5 sec. OFF 50 cycles. With following DC pulse test voltage ■ Pulse voltage:1/6W,S1/4W：3KV. ≧1/4W：100KΩ：(3KV)；100KΩ-620KΩ：(5KV)；＞620KΩ：(10KV)
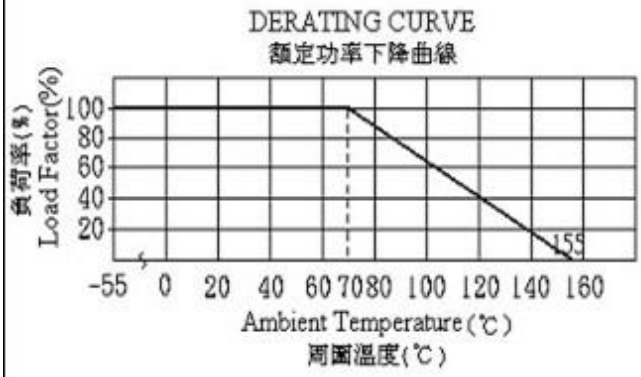		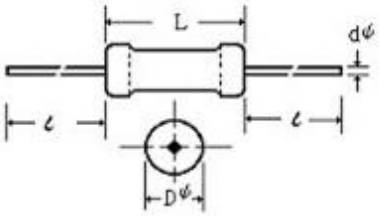 Various type of forming & taping are available 提供插装的造型与带装 Coating color：RMU1/4W,RMU1/6W、dark blue, other、pink。 涂装颜色：RMU1/4W,RMU1/6W蓝色,其他粉红色。

■ CHARACTERISTICS 性 能

Model 型名	Power Rating 额定功率 (W)	Resistance Range E-24 阻值范围 Ω	Maximum Working Voltage 最高使用电压	Dielectric Withstanding Voltage 耐电压	Dimension 尺寸 (mm)			
					L	D φ	ι	d φ
RMU1/4W、RMS1/2W	1/4,1/2	10Ω ~ <100M	1600V	700V	6±0.3	2.4±0.1	28±2	0.6±0.05